好油缸 阿凡特

Avanter (Headquarter)

Address: 4387#, the fourth Jianshe Road, Xiaoshan District,
Hangzhou City, Zhejiang Province

Tel: 0571-82853666

0571-82859300 0571-82857933

Email: AFT@zjadvanced.com

Website: http://www.zjadvanced.com

Avanter (Korea)

Address: 5th Floor room 511, 111, Jungang-daero,
Seongsan-gu, Changwon-si, Gyeongsangnam-do,
Republic of Korea

Tel: +82(0)10-3323-7502

Email: wyd7502@naver.com

AVANTER
阿凡特液压

FOCUSING ON

MAKING EVERY CYLINDER WELL

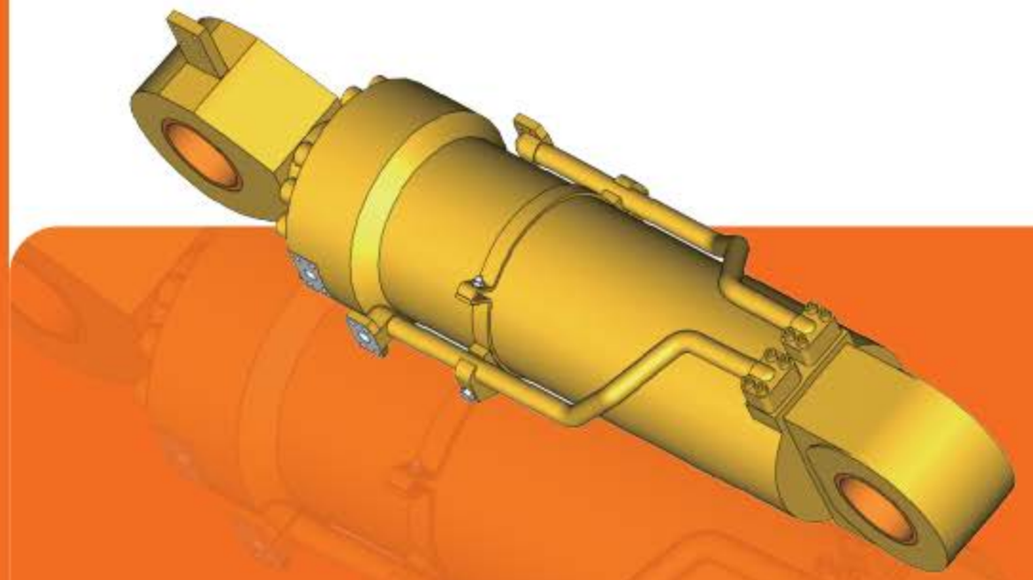

ZHEJIANG ADVANCED HYDRAULIC TECHNOLOGY CO.,LTD.



COMPANY PROFILE

Building area

76000㎡

Current employees

420

AVANTER

ZHEJIANG ADVANCED HYDRAULIC TECHNOLOGY CO.,LTD.

Company Profile

Zhejiang Advanced Hydraulic Technology Co.,Ltd. is a national high-tech enterprise and a specialized enterprise focusing on the field of high-end hydraulics. Since 1995, the company has been committed to the research, development and production of hydraulic cylinders, focusing on making every cylinder well, focusing on excellence and striving for perfection.

The company covers an area of 100 acres, with a plant area of 76,000 square meters and 420 employees. It has advanced production equipment and intelligent manufacturing workshops, equipped with more than 200 imported high-precision cylinder production equipment to ensure the quality and production efficiency of the products. Through long-term efforts and innovation, the company has established a strong professional team including foreign expert workstations, provincial development centers, professional technician studios, and senior engineers and highly skilled talents. The company continues to invest in research and development, successfully developing thousands of new products and multiple invention patents every year, to drive development with innovation.

Applications of our products

The high-pressure hydraulic cylinders produced by us are widely used in engineering machinery, marine equipment, intelligent manufacturing, and other fields, and their performance has reached the world's advanced level. As one of the leading companies in the industry, we rank first in the country in the segment of hydraulic cylinders for rotary drilling rigs. The company has established long-term and stable supporting cooperation relationships with many well-known manufacturers around the world.

Prospect for future

Zhejiang advanced Hydraulic Technology Co., Ltd. will continue to uphold the corporate spirit of "leading technology, excellent quality, meticulous management, and win-win growth", take "good cylinders from Avanter" as the goal, and continuously improve product quality and service level to create greater value for customers.

MANUFACTURING STRENGTH

The company has more than 200 imported high-precision cylinder manufacturing equipment such as machining centers, turning centers, large CNC lathes, CNC deep hole cutting and rolling combined machine tools, robot welding machines, high-precision polishing machines, fully automatic cleaning equipment, automatic cylinder assembly machines, etc. ensure the quality and effident production of the cylinders.







Focusing on making every cylinder wall 专注油缸 匠心制造













COMPANY PROFILE

AVANTER 阿凡特液压

FOCUSING ON MAKING EVERY CYLINDER WELL



Product Application

Zhejiang Advanced Hydraulic Technology Co., Ltd. has a highly skilled and experienced team. We polish each cylinder with the spirit of craftsmanship and interpret the mission of "focusing on making every cylinder well" with practical actions. We continue to pursue excellence and keep improving. We will continue to uphold this mission to create more for customers and contribute more value to the development of the hydraulic industry.







MINING TRCUK

Application cases

OEMs: XCMG



Applicalbe hydraulic cylinders



Front suspension cylinder



Lifting system



Rear suspension cylinder



Steering cylinder



Steering cylinder

DRILLING JAMBO

Application cases

OEMs:
XCMG、EPIROC、SITON









Applicalbe hydraulic cylinders



Thrust pitch cylinder



Outrigger Cylinder



Boom opening and closing cylinder



Rear triangle cylinder



Drill arm telescopic cylinder



OEMs: XCMG、DEVELON、JINTAI

Focusing on making every cylinder well








Luffing Cylinder


Tilt cylinder


Pressurized cylinder


Track telescopic cylinder


Outrigger Cylinder

FORKLIFT

Application cases

OEMs: HANGCHA



Applicalbe hydraulic cylinders



Tilt cylinder



Fully automatic lifting cylinder



Steering cylinder



Lifting cylinder